BBC

WALKING WITH BEASTS™

MOVING MODEL

SMILODON

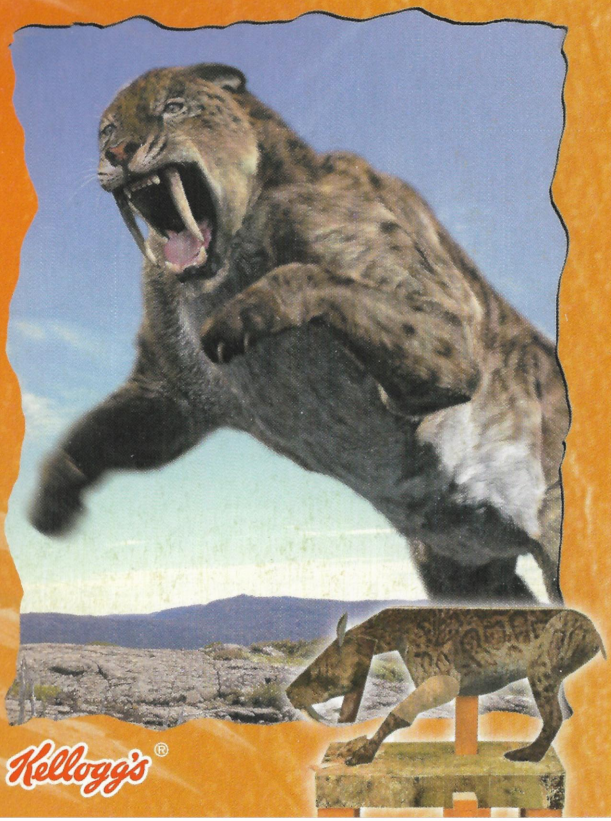

Kellogg's®

INTRODUCING...

SMILODON

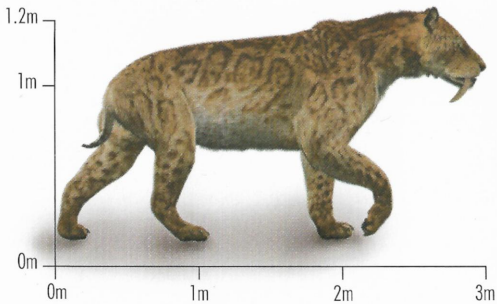

Smilodon roams the grassy veldt and dusty plains of one million years B.C. searching for prey. With such a big appetite, Smilodon needs all the prey he can find!

Full instructions for making this model can be found at the back of this booklet.

KEY FACTS

NAME

Smilodon

LATIN NAME

Smilodon populator

PRONUNCIATION

SMY-loh-don

MEANING

"Knife tooth"

TIME RANGE

1.5–0.1 million years ago

KEY FACTS

TYPE OF ANIMAL

Mammal

EATS

Meat – and lots of it, up to the equivalent of 120 burgers a day!

FAVOURITE FOOD

Anything he can catch big enough to satisfy his enormous appetite!

SIZE

2.5m long, 1.2m at the shoulder.

WEIGHT

200–240kg

KEY FACTS

CLOSEST LIVING RELATIVES

Cats

FOSSIL FINDS

Smilodon populator is known from several sites in Brazil, Argentina and especially the Tarija formation in Bolivia. Smilodon fatalis, the North American species, is known from the many skeletons preserved in the La Brea tar pits in California.

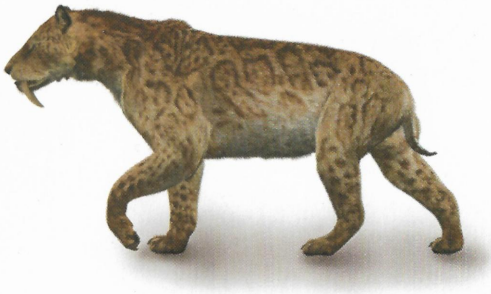

Smilodon, the famous sabre tooth tiger, is the top predator of his time – the killer cat of the ancient plains.

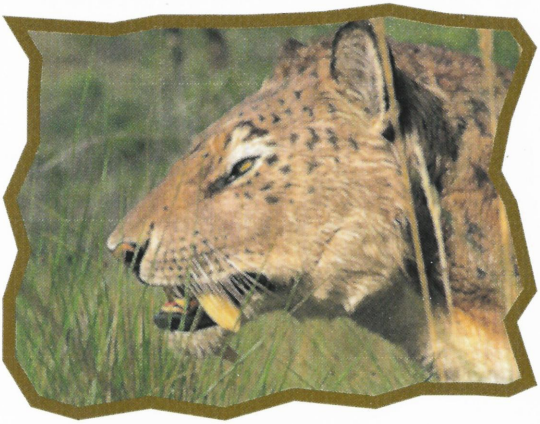

Living in closely knit prides often ruled over by a single proud male, Smilodon hunt in packs, working together to bring down prey.

They are extremely competent hunters, with the intelligence and co-operative skills of a truly social animal.

Although Smilodon is stockily built, he is capable of sudden, terrifying bursts of speed, an ability which he relies on during the hunt.

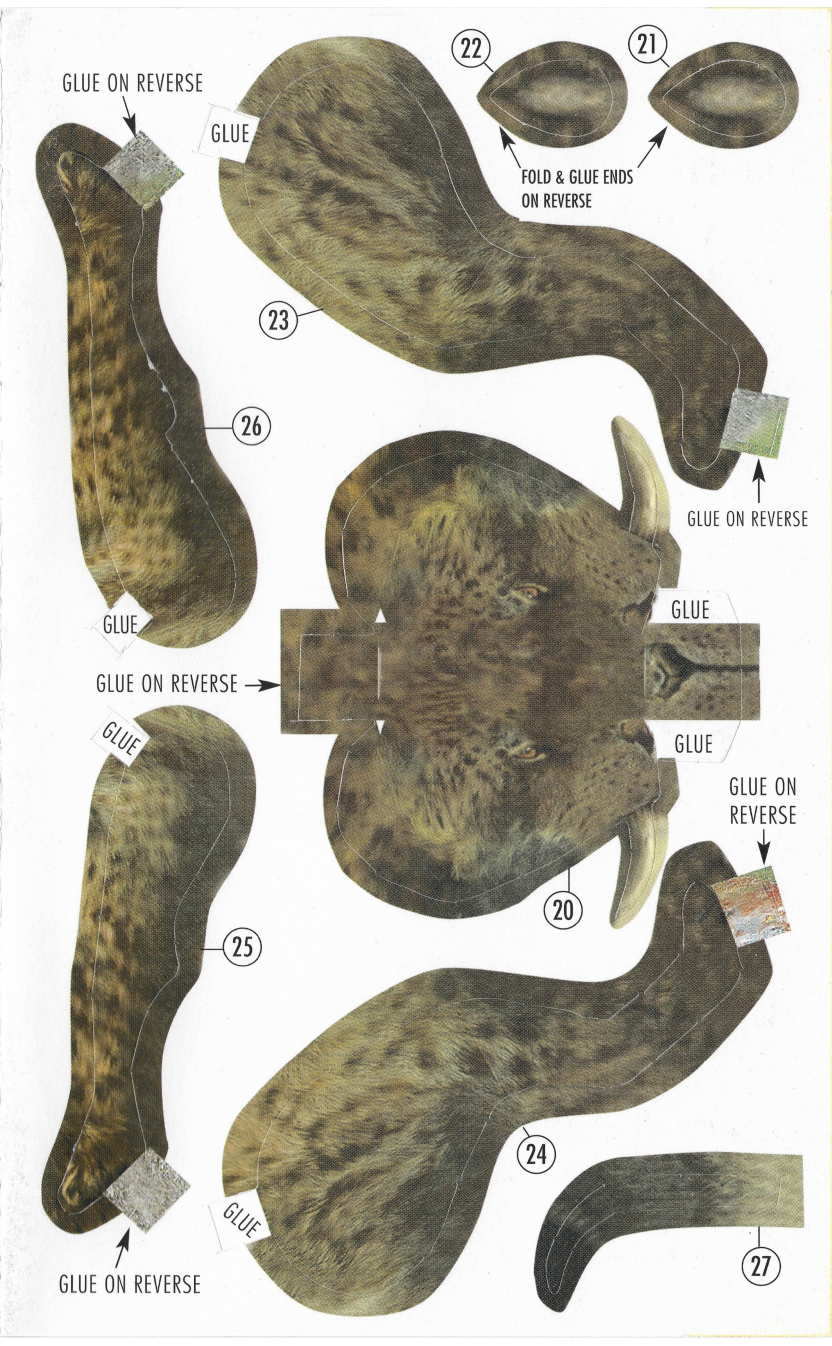
GLUE ON REVERSE
GLUE
22
21
FOLD & GLUE ENDS ON REVERSE
23
26
GLUE ON REVERSE
GLUE
GLUE ON REVERSE
GLUE
GLUE
GLUE
GLUE ON REVERSE
20
25
24
GLUE
GLUE ON REVERSE
27

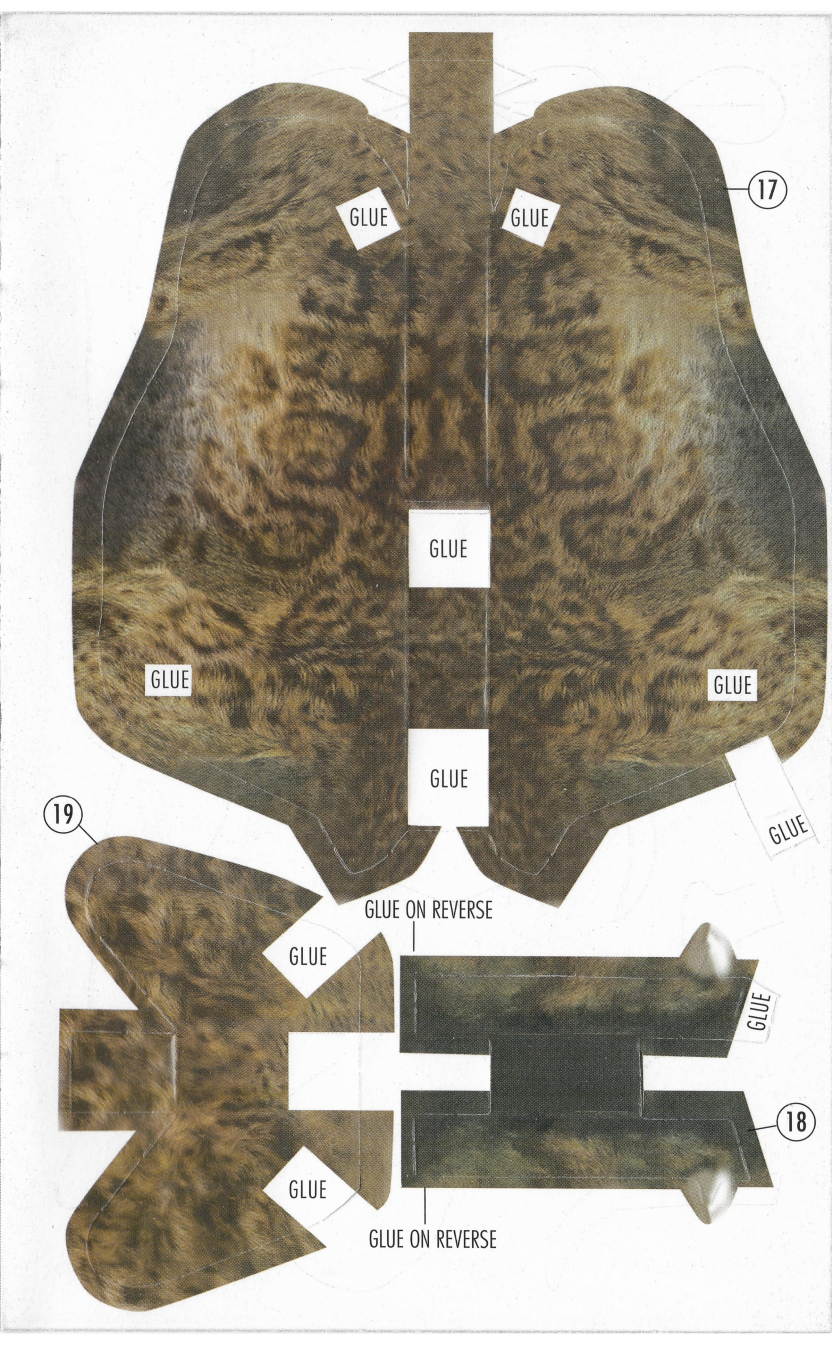
17
GLUE
GLUE
GLUE
GLUE
GLUE
GLUE
GLUE
19
GLUE ON REVERSE
GLUE
GLUE
18
GLUE
GLUE ON REVERSE

28
14
GLUE
GLUE
GLUE
GLUE
GLUE
FRONT
GLUE
GLUE
GLUE
GLUE

1

GLUE

GLUE

GLUE

GLUE

GLUE

GLUE

FRONT

BBC

Walking with Beasts ©BBC 2001 Model design ©Keith Newstead 2001

6
GLUE
GLUE ON REVERSE
12
GLUE
GLUE
GLUE
9
GLUE
GLUE
GLUE

15
FRONT
BACK
GLUE
16
11
10
13
GLUE
GLUE
7
GLUE
GLUE
GLUE
GLUE
8
GLUE
GLUE
GLUE

GLUE

SMILODON

GLUE

GLUE

2

GLUE

3

GLUE

SMILODON

GLUE

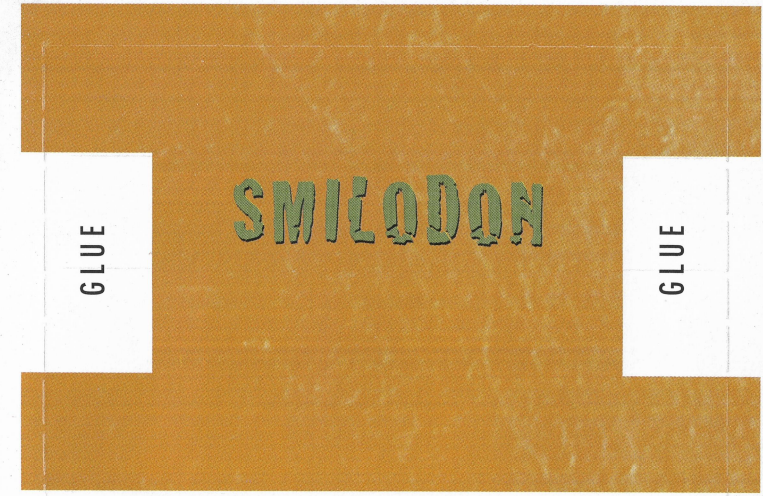

GLUE

4

5

GLUE

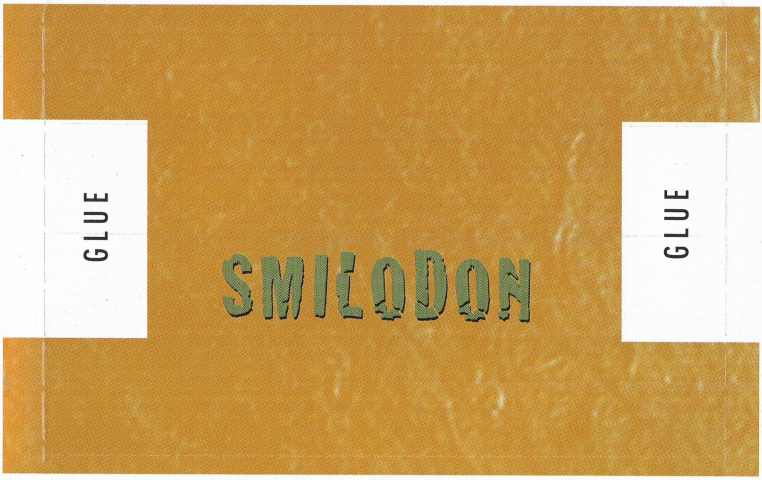

Smilodon lies in wait in the cover of the long grasses, then, when the moment is right, he pounces with power and ferocity on his unsuspecting prey.

While his teeth are terrifying – the size of carving knives – they do bring Smilodon certain problems. He can't bite while his prey is struggling –

– if he does, he risks breaking those razor-sharp sabres. So if you ever find yourself up against a hungry sabre tooth – keep struggling!

Thought they were extinct? Think again! Simply assemble this moving model, then turn the handle to bring Smilodon back to life.

Instructions for Smilodon

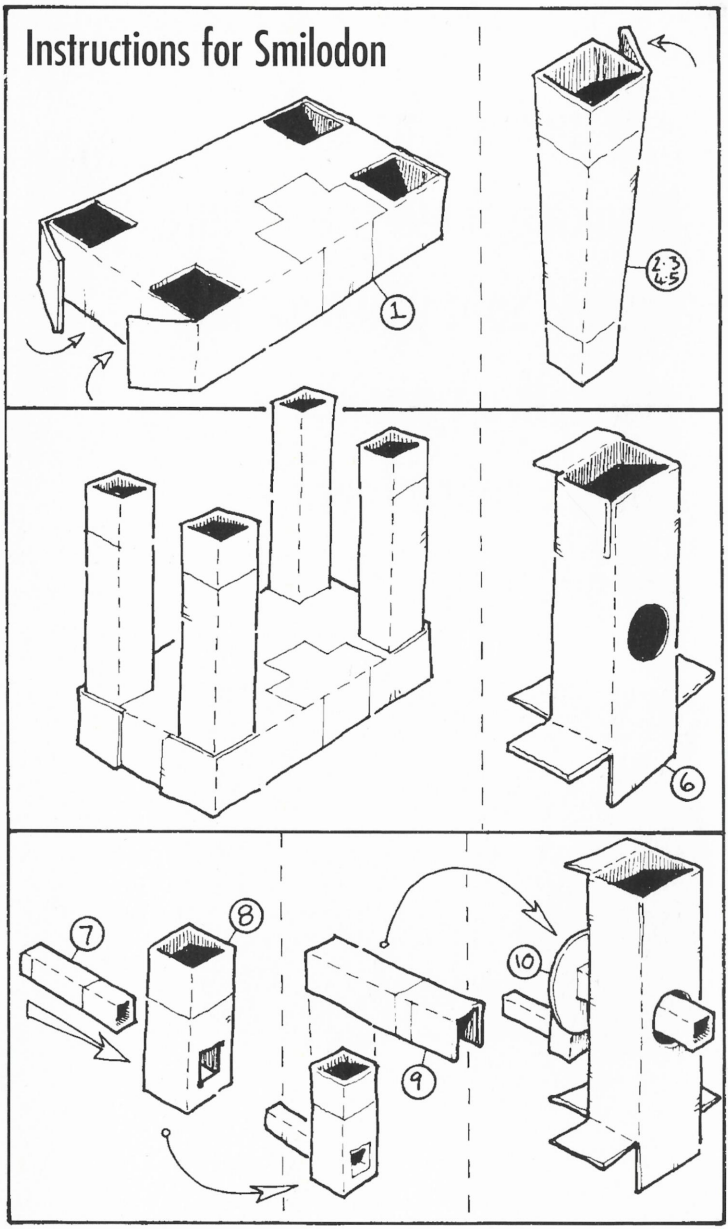

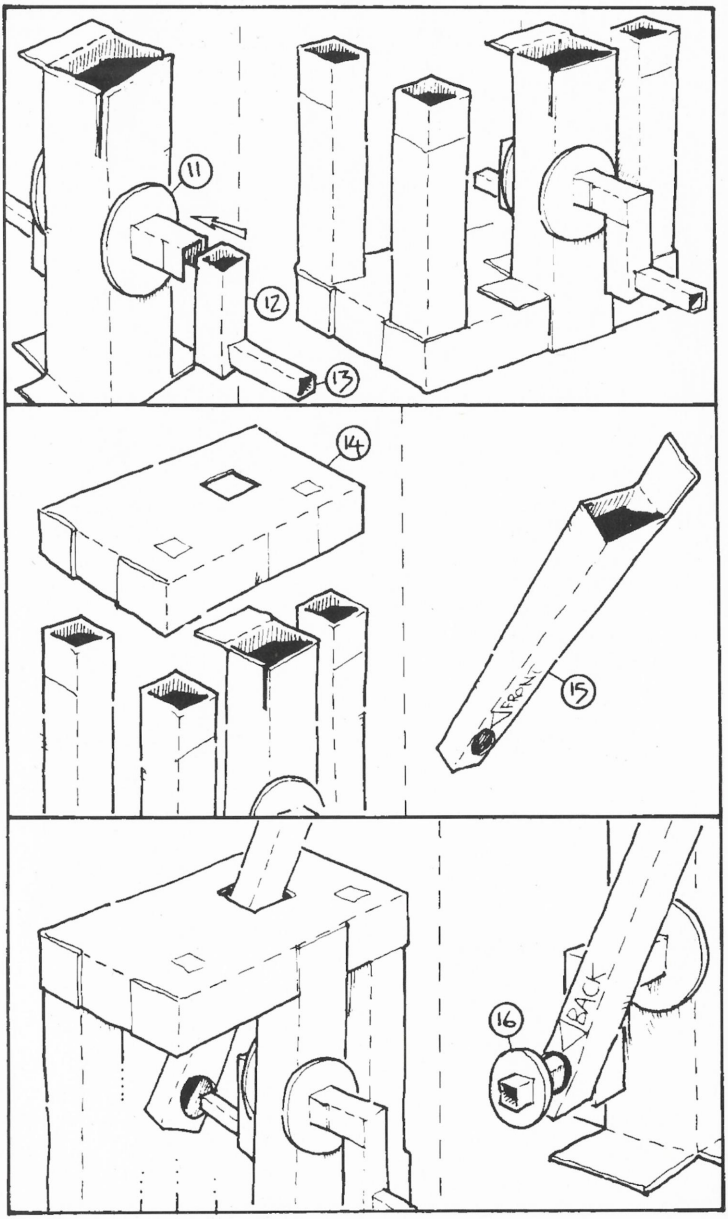
11
12
13
14
15
FRONT
16
BACK

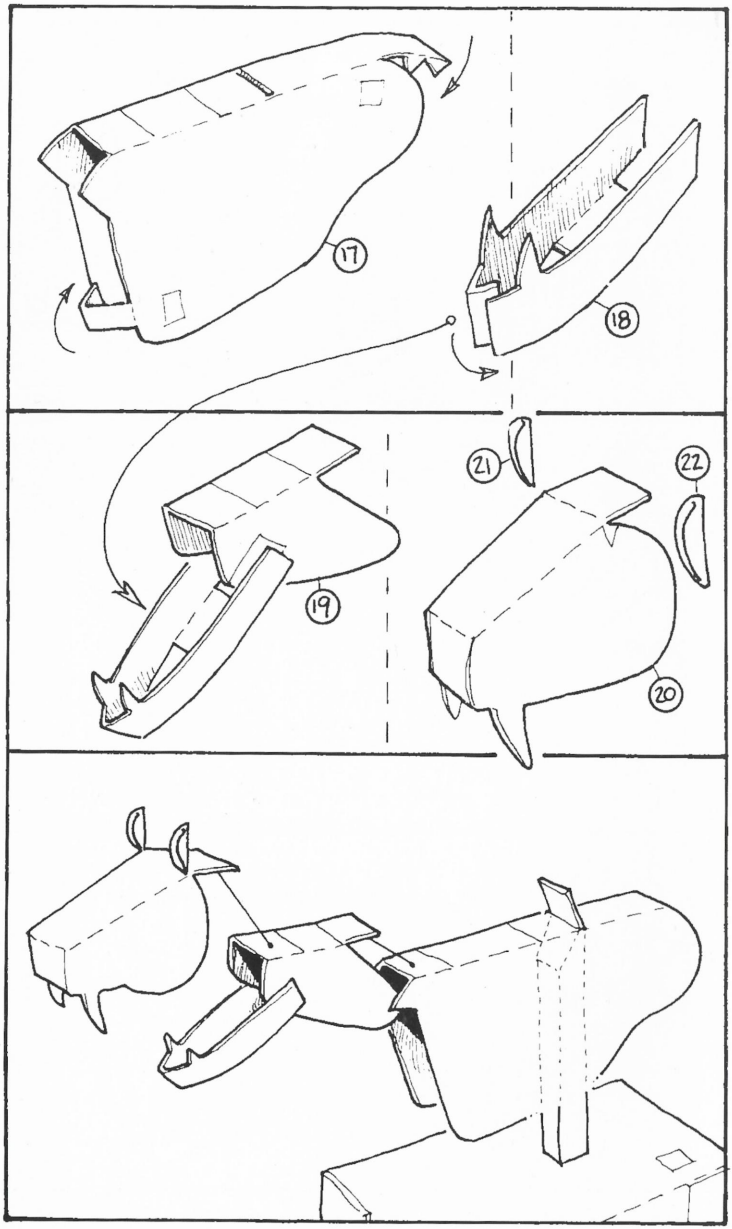
17
18
19
20
21
22

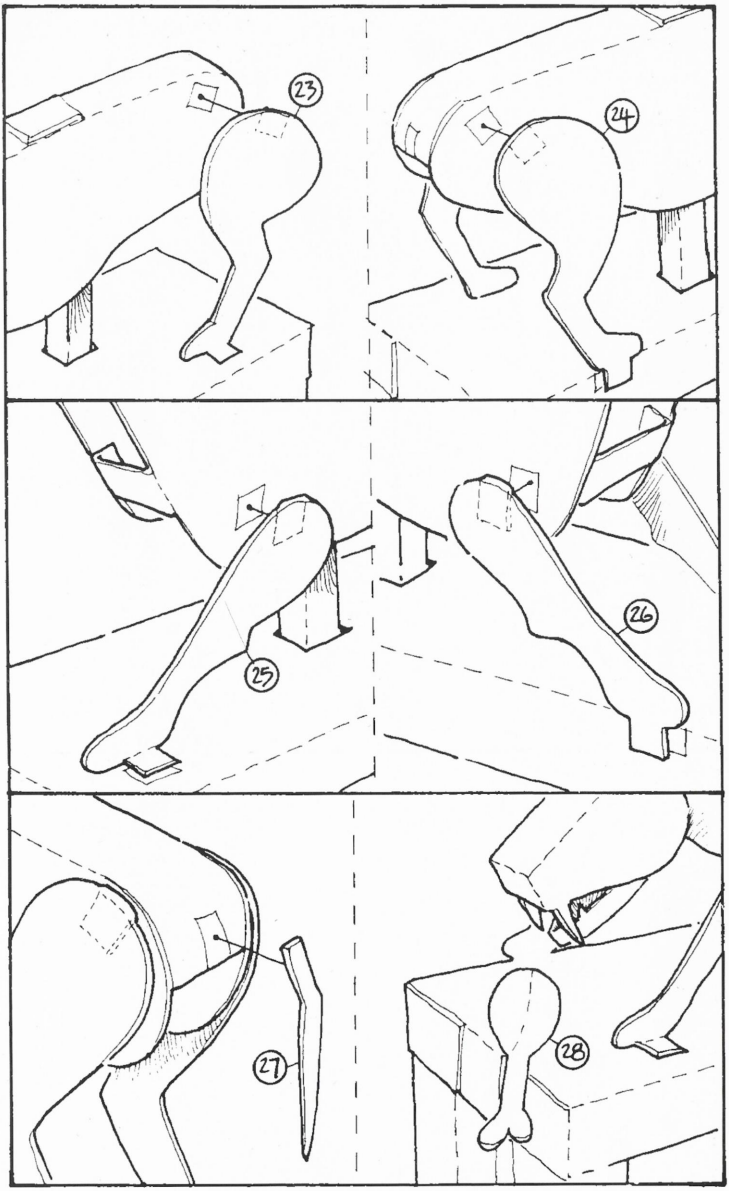

Edited by Paul Whittle/Digital artwork & layout by Alex Ingr. Arcturus Publishing Ltd, 1–7 Shand Street, London SE1 2ES

WALKING WITH BEASTS™

MOVING MODEL

- Easy to assemble moving model
- Press-out pieces – no cutting
- Photo-real animal features
- 4 beasts to collect!

SMILODON

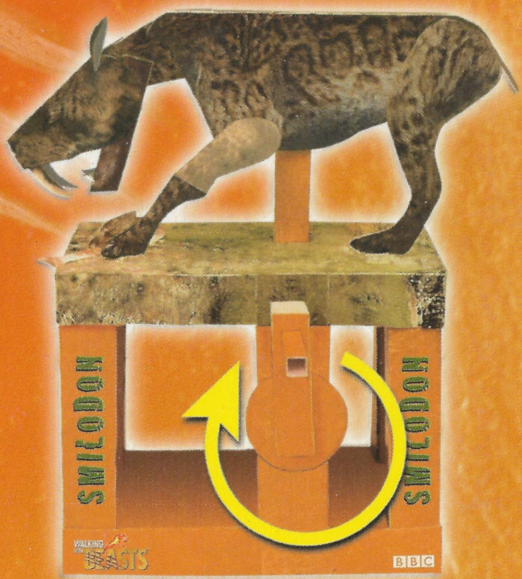

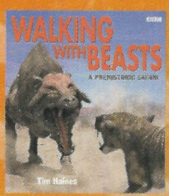

There is also a fabulous range of Walking with Beasts products available, including books, video, a CD Rom game and a music CD

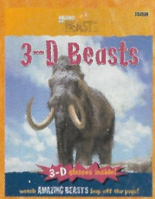

CE

Free with special packs of Kellogg's® COCO POPS & FROSTIES

Kellogg's, Frosties and Coco Pops are registered Trade Marks of Kellogg Company

Walking with Beasts TM & © BBC 2001 Model design © Keith Newstead 2001